81.6mm

101.3mm

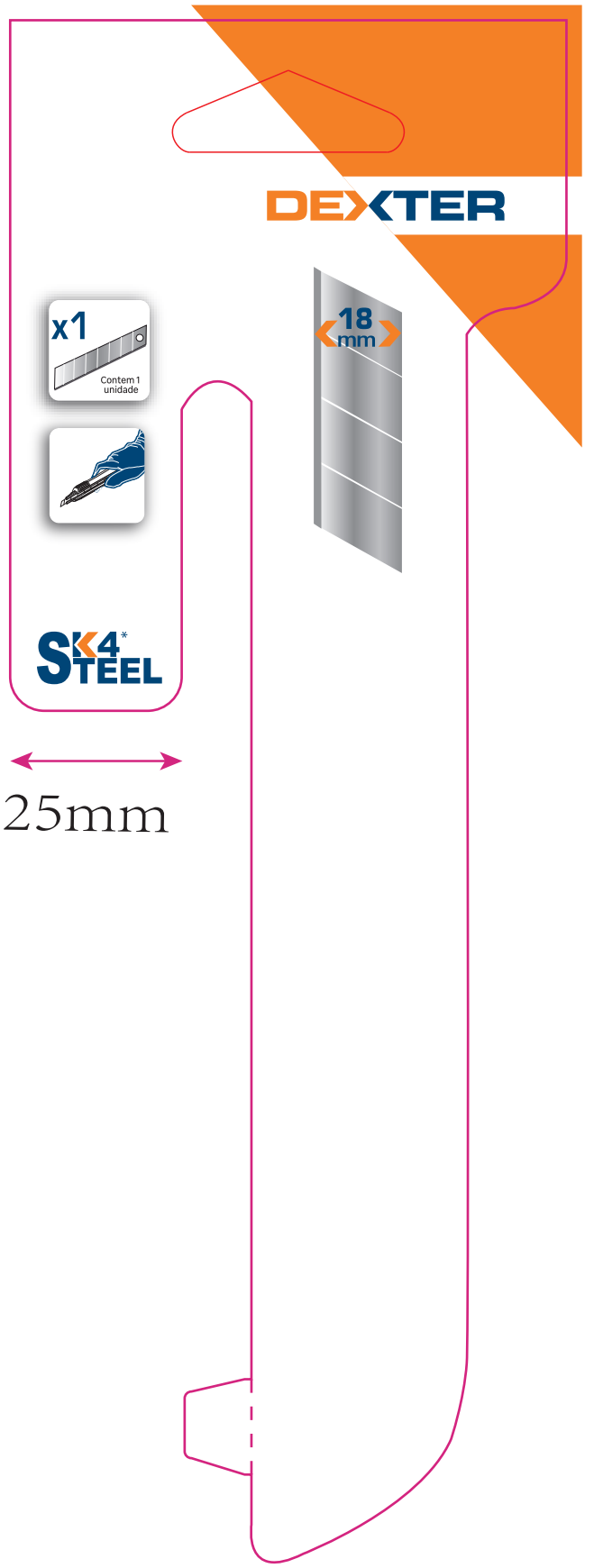

25mm

226.3mm
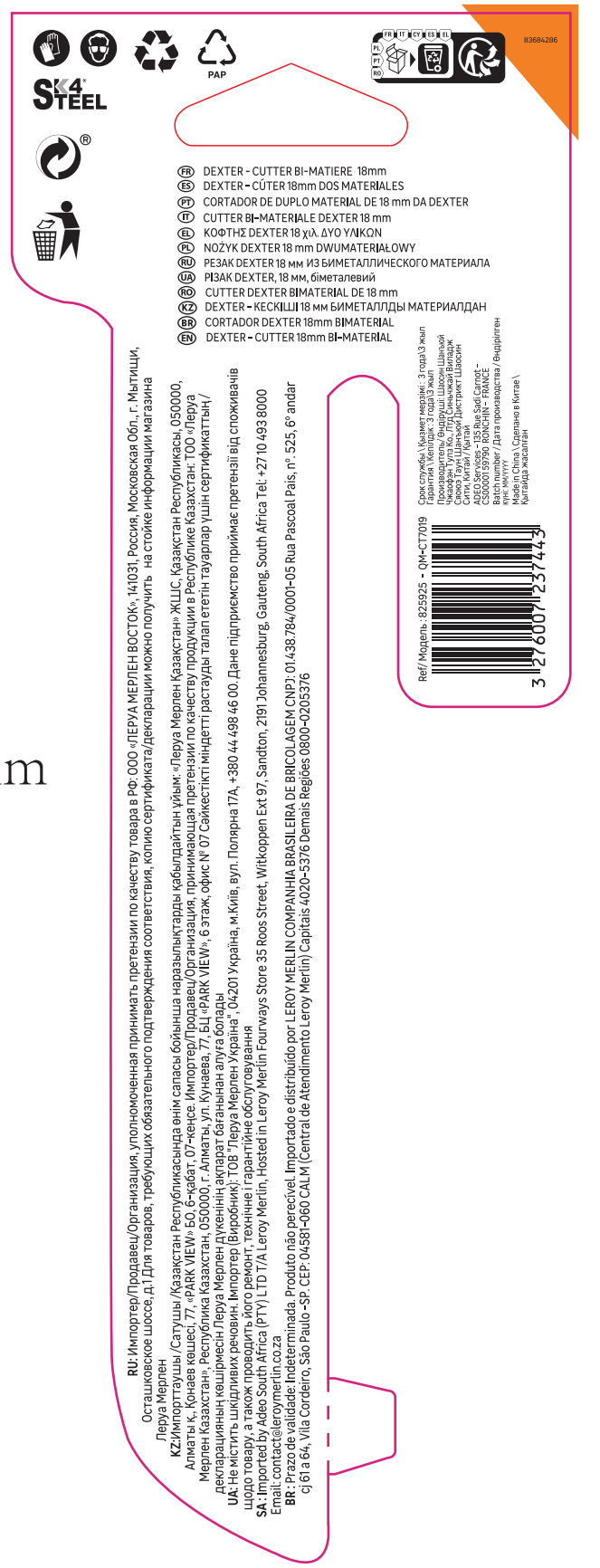
31.7mm